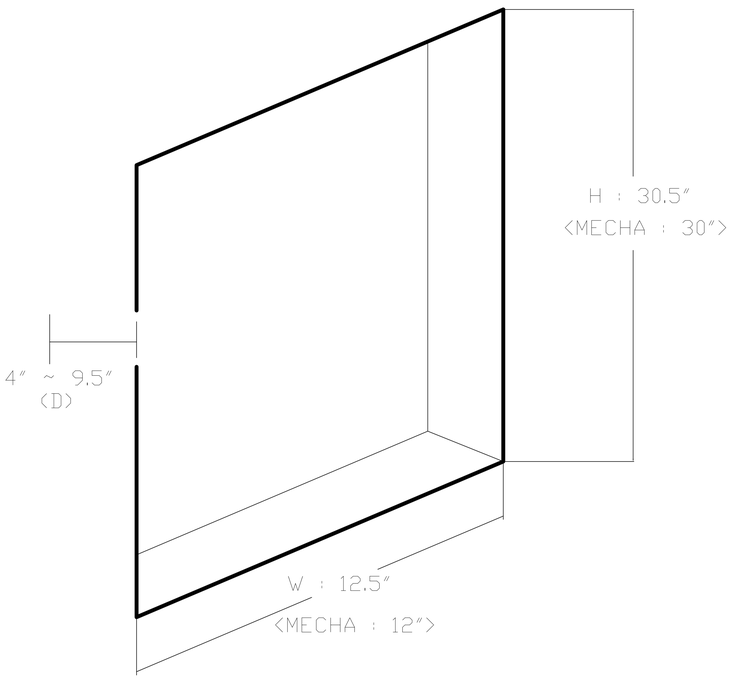
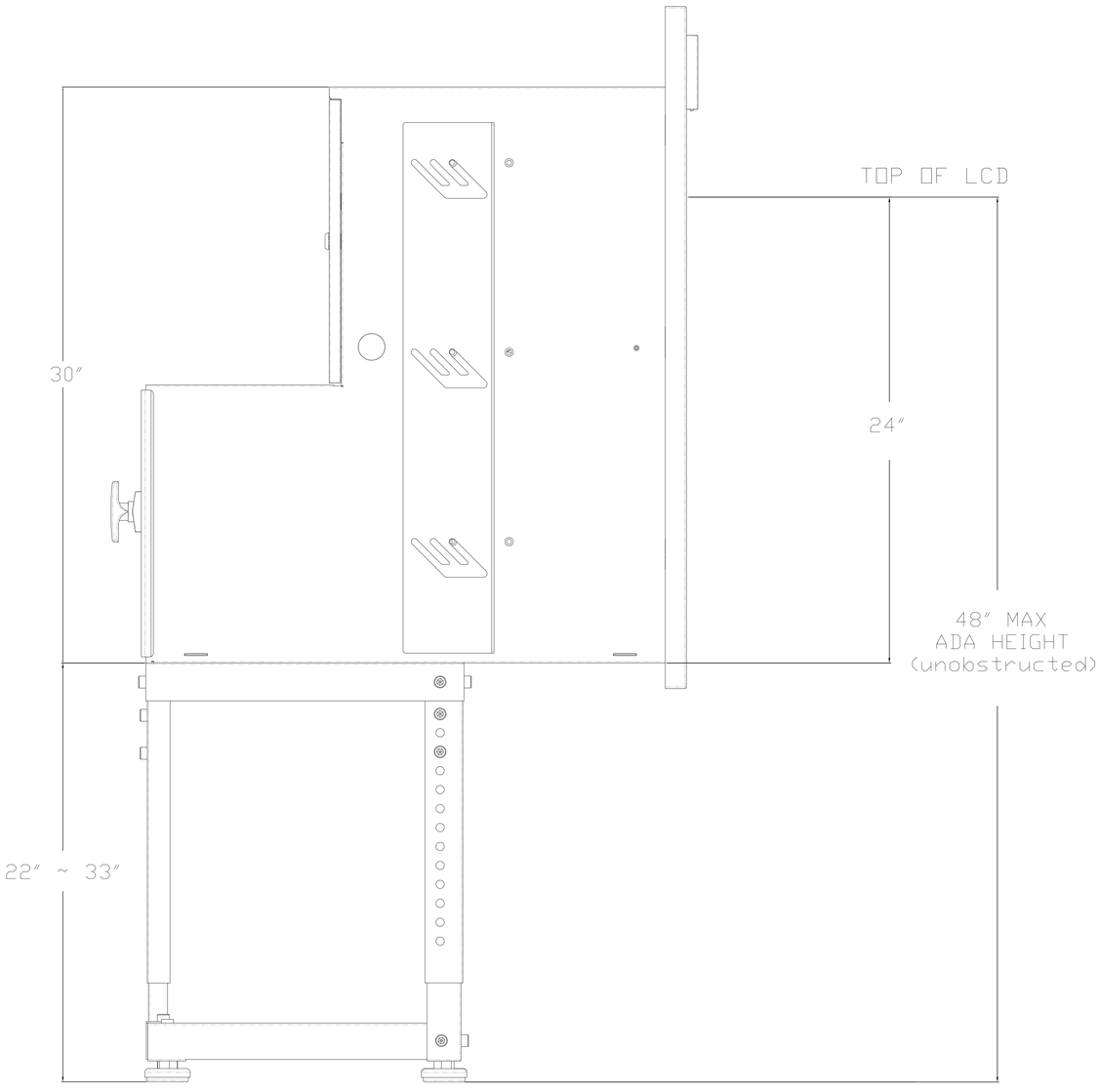
<< RECOMMEND HOLE SIZE >>